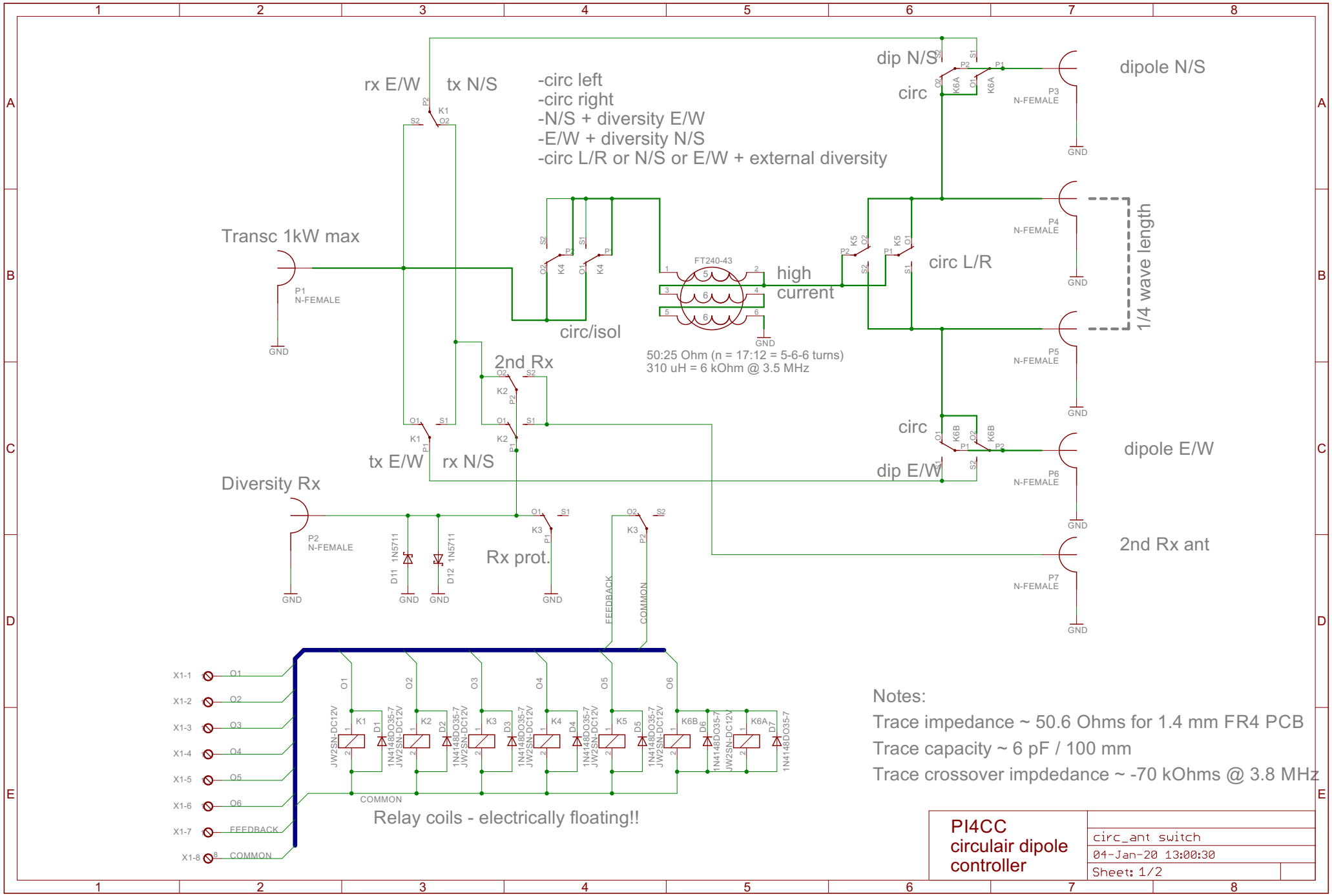

Notes:

Trace impedance ~ 50.6 Ohms for 1.4 mm FR4 PCB

Trace capacity ~ 6 pF / 100 mm

Trace crossover impdedance ~ -70 kOhms @ 3.8 MHz

PI4CC circulair dipole controller	circ_ant switch
	04-Jan-20 13:00:30
	Sheet: 1/2